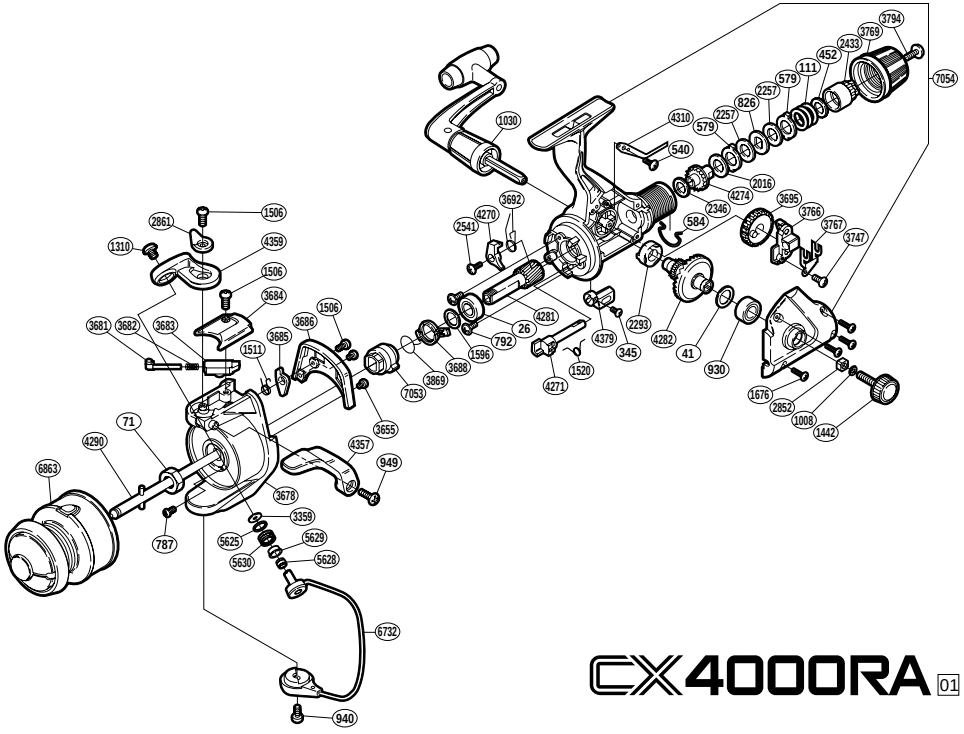

CX4000RA 01

RD No.	PARTS NAMES	RD No.	PARTS NAMES	RD No.	PARTS NAMES
0026	Ball Bearing	1676	Side Cover Screw	3767	Oscillating Slider Retainer
0041	Drive Gear Washer	2016	Drag Washer “H” (cloth)	3769	Drag Knob
0071	Rotor Nut	2257	Drag Washer “H” (blue)	3794	Drag Knob Screw
0111	Drag Coil Spring	2293	Drive Gear Bushing	3869	Anti-Reverse Lock Out Spring
0345	Anti-Reverse Lever Screw	2346	Drag Washer “C” (cloth)	4270	Anti-Reverse Pawl
0452	Drag Spring Washer	2433	Pressure Screw	4271	Anti-Reverse Cam
0540	Drag Click Screw	2541	Anti-Reverse Pawl Screw	4274	Drag Shaft
0579	Eared Washer “B”	2852	Handle Screw Lock	4281	Pinion Gear
0584	Hold Click Spring	2861	Trigger Cam	4282	Drive Gear
0787	Nut Lock Screw	3359	Line Roller Washer	4290	Main Shaft Assembly
0792	Bearing Retainer Screw	3655	Cover Screw	4310	Drag Click
0826	Key Washer “A”	3678	Rotor	4357	Quick-Fire II Trigger
0930	Ball Bearing	3681	Bail Spring Guide (A)	4359	Bail Arm
0940	Bail Hold Support Screw	3682	Bail Spring	4379	Anti-Reverse Lever
0949	Trigger Screw	3683	Bail Spring Guide (B)	5625	Line Roller Spacer
1008	Handle Lock Washer	3684	Bail Spring Cover	5628	Line Roller Collar
1030	Handle Assembly	3685	Bail Trip Lever	5629	Line Roller Bushing
1310	Line Roller Screw	3686	Counterbalance Cover	5630	Line Roller
1442	Handle Screw Cap	3688	Anti-Reverse Lock Out	6732	Bail Assembly
1506	Multi-Purpose Screw	3692	Anti-Reverse Pawl Spring	6863	Spool Assembly
1511	Lever Spring	3695	Oscillating Gear	7053	Anti-Reverse Ratchet
1520	Anti-Reverse Cam Spring	3747	Slider Retainer Screw	7054	Body Set
1596	Bushing Washer	3766	Oscillating Slider		

(120630)