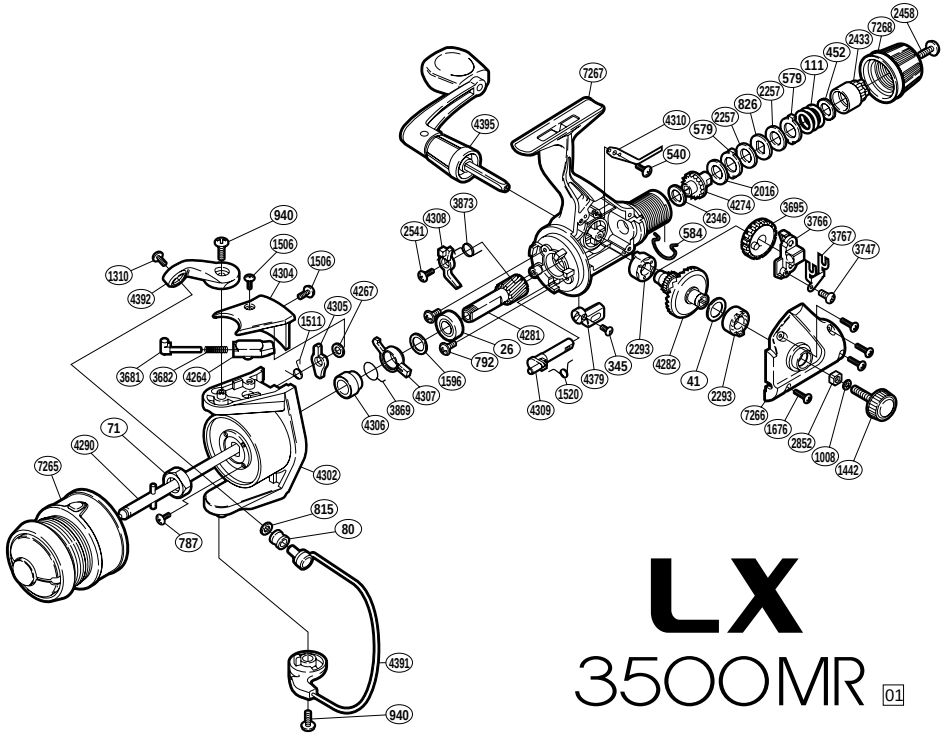

LX 3500MR 01

RD No.	PARTS NAMES	RD No.	PARTS NAMES	RD No.	PARTS NAMES
0026	Ball Bearing	1596	Bushing Washer	4274	Drag Shaft
0041	Drive Gear Washer	1676	Side Cover Screw	4281	Pinion Gear
0071	Rotor Nut	2016	Drag Washer “H” (cloth)	4282	Drive Gear
0080	Line Roller	2257	Drag Washer “H” (blue)	4290	Main Shaft Assembly
0111	Drag Coil Spring	2293	Drive Gear Bushing	4302	Rotor
0345	Anti-Reverse Lever Screw	2346	Drag Washer “C” (cloth)	4304	Bail Spring Cover
0452	Drag Spring Washer	2433	Pressure Screw	4305	Bail Trip Lever
0540	Drag Click Screw	2458	Drag Knob Screw	4306	Lock Out Spring Holder
0579	Eared Washer “B”	2541	Anti-Reverse Pawl Screw	4307	Anti-Reverse Lock Out
0584	Hold Click Spring	2852	Handle Screw Lock	4308	Anti-Reverse Pawl
0787	Nut Lock Screw	3681	Bail Spring Guide (A)	4309	Anti-Reverse Cam
0792	Bearing Retainer Screw	3682	Bail Spring	4310	Drag Click
0815	Line Roller Washer	3695	Oscillating Gear	4379	Anti-Reverse Lever
0940	Multi-Purpose Screw	3747	Slider Retainer Screw	4391	Bail Assembly
1008	Handle Lock Washer	3766	Oscillating Slider	4392	Bail Arm
1310	Line Roller Screw	3767	Oscillating Slider Retainer	4395	Handle Assembly
1442	Handle Screw Cap	3869	Anti-Reverse Lock Out Spring	7265	Match Spool Assembly
1506	Multi-Purpose Screw	3873	Anti-Reverse Pawl Spring	7266	Side Cover
1511	Lever Spring	4264	Bail Spring Guide (B)	7267	Body
1520	Anti-Reverse Cam Spring	4267	Bail Trip Lever Washer	7268	Drag Knob Assembly

(120830)