NEXAVE

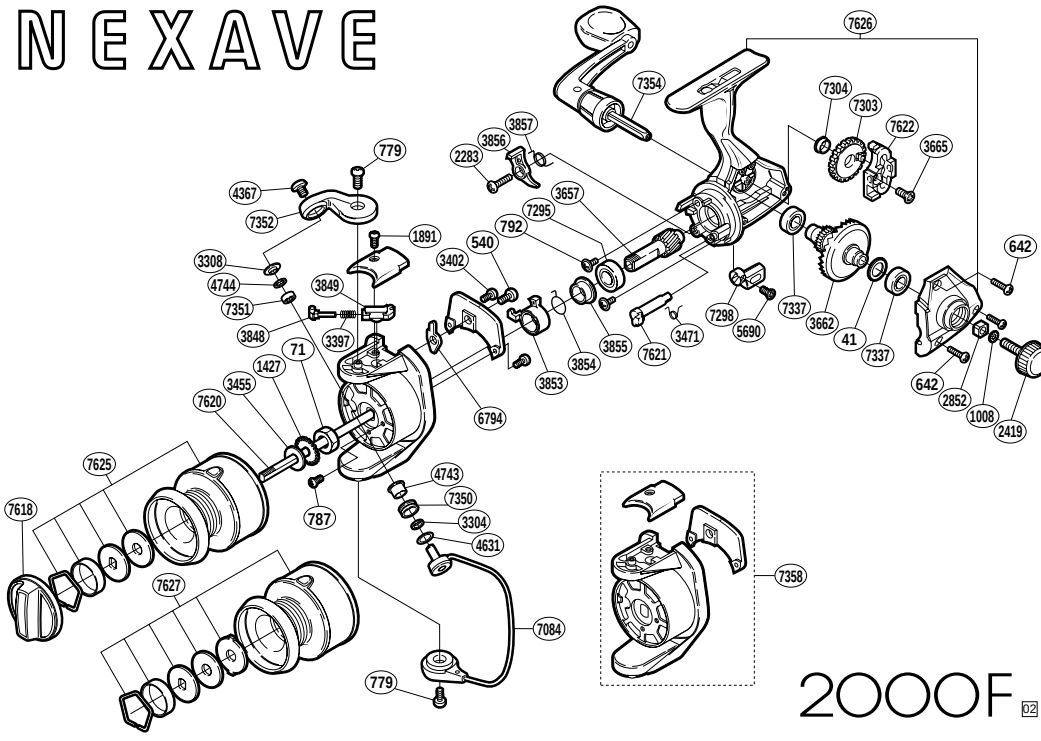

'02 NEX 2000F

RD No.	PARTS NAMES	RD No.	PARTS NAMES	RD No.	PARTS NAMES
0041	Drive Gear Washer	3471	Anti-Reverse Cam Spring	7295	Ball Bearing
0071	Rotor Nut	3657	Pinion Gear	7298	Anti-Reverse Lever
0540	Bail Trip Lever Screw	3662	Drive Gear	7303	Oscillating Gear
0642	Side Cover Screw	3665	Slider Retainer Screw	7304	Oscillating Gear Bushing
0779	Multi-Purpose Screw	3848	Bail Spring Guide (A)	7337	Ball Bearing
0787	Nut Lock Screw	3849	Bail Spring Guide (B)	7350	Line Roller
0792	Bearing Retainer Screw	3853	Anti-Reverse Lock Out	7351	Line Roller Bearing
1008	Handle Lock Washer	3854	Anti-Reverse Lock Out Spring	7352	Bail Arm
1427	Spool Support	3855	Lock Out Spring Holder	7354	Handle Assembly
1891	Bail Spring Cover Screw	3856	Anti-Reverse Pawl	7358	Rotor Assembly
2283	Anti-Reverse Pawl Screw	3857	Anti-Reverse Pawl Spring	7618	Drag Knob Assembly
2419	Handle Screw Cap	4367	Line Roller Screw	7620	Main Shaft
2852	Handle Screw Lock	4631	Spacer	7621	Anti-Reverse Cam
3304	Bearing Spacer	4743	Line Roller Bushing	7622	Oscillating Slider
3308	Line Roller Washer	4744	Roller Bearing Seal	7625	Spool Assembly
3397	Bail Spring	5690	Anti-Reverse Lever Screw	7626	Body Assembly
3402	Cover Screw	6794	Bail Trip Lever		
3455	Spool Washer	7084	Bail Assembly	7627	Spare Spool Assembly

(140325)