SEDONA

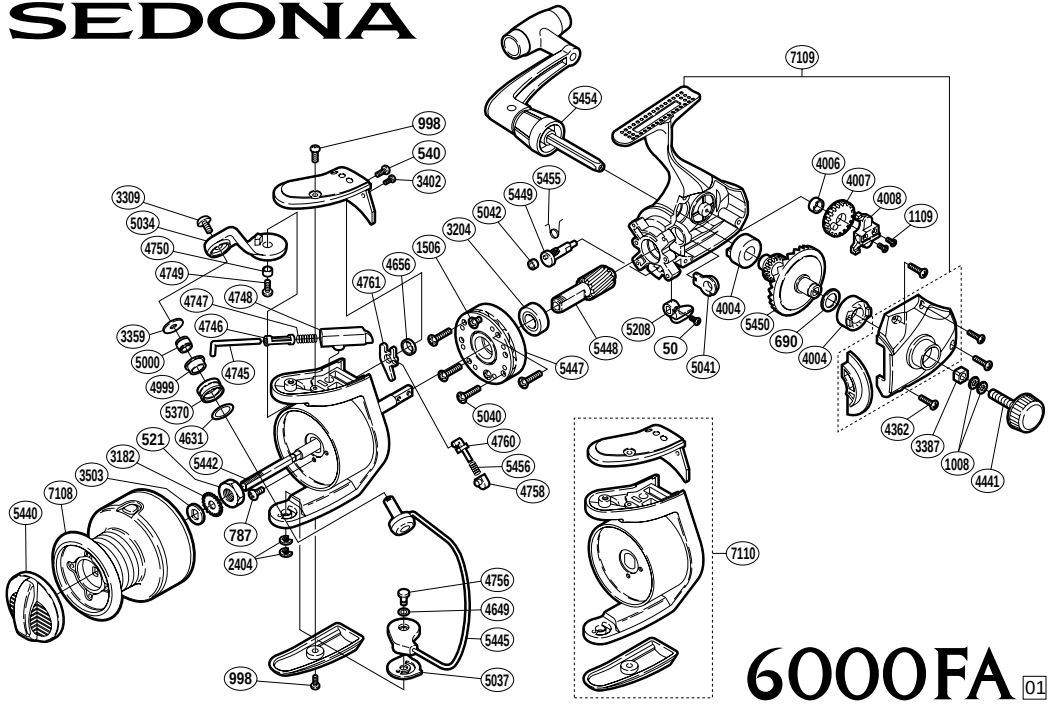

6000FA 01

RD No.	PARTS NAMES	RD No.	PARTS NAMES	RD No.	PARTS NAMES
0050	Anti-Reverse Lever Screw	4008	Oscillating Slider	5040	Roller Clutch Screw
0521	Rotor Nut	4362	Side Cover Screw	5041	Bushing
0540	Bail Spring Cover Screw (large)	4441	Handle Screw Cap	5042	Anti-Reverse Cam Ring
0690	Drive Gear Washer	4631	Spacer	5208	Anti-Reverse Lever
0787	Nut Lock Screw	4649	Spacer	5370	Line Roller
0998	Multi-Purpose Screw	4656	Trip Lever Spacer	5440	Drag Knob
1008	Handle Lock Washer	4745	Bail Spring Guide (A)	5442	Main Shaft
1109	Slider Retainer Screw	4746	Bail Spring Guide (A) Support	5445	Bail Assembly
1506	Clutch Cover Screw	4747	Bail Spring	5447	Roller Clutch Assembly
2404	“E” Lock	4748	Bail Spring Guide (B)	5448	Pinion Gear
3182	Spool Support	4749	Bail Arm Screw	5449	Anti-Reverse Cam
3204	Ball Bearing	4750	Bail Arm Bushing	5450	Drive Gear
3309	Line Roller Screw	4756	Bail Hold Support Shaft	5454	Handle Assembly
3359	Line Roller Washer	4758	Lever Spring Guide (B)	5455	Anti-Reverse Cam Spring
3387	Handle Screw Lock	4760	Lever Spring Guide (A)	5456	Lever Spring
3402	Bail Spring Cover Screw (small)	4761	Bail Trip Lever	7108	Spool Assembly
3503	Spool Washer	4999	Line Roller Bushing	7109	Body Assembly
4004	Drive Gear Bushing	5000	Line Roller Collar	7110	Rotor Assembly
4006	Oscillating Gear Bushing	5034	Bail Arm		
4007	Oscillating Gear	5037	Bail Hold Support Spacer		

(120706)