SPHEROS 14000FA 02

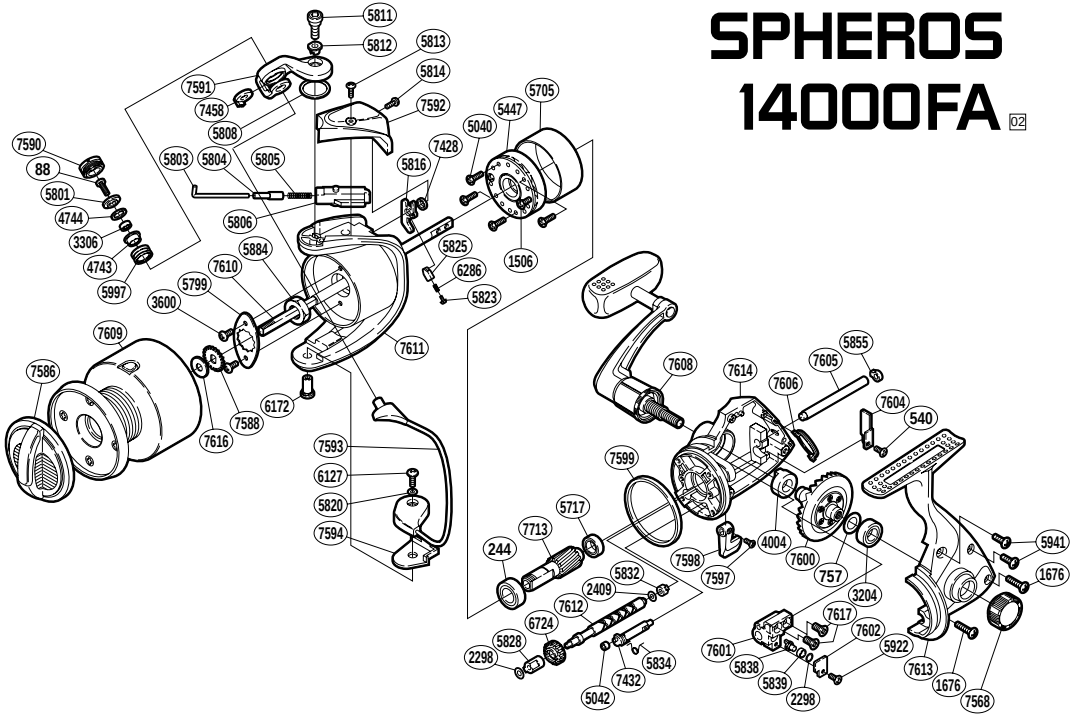

RD No.	PARTS NAMES	RD No.	PARTS NAMES	RD No.	PARTS NAMES
0088	Line Roller Screw	5811	Bail Arm Screw	7586	Drag Knob
0244	Ball Bearing	5812	Bail Arm Screw Collar	7588	Spool Support
0540	Worm Shaft Retainer Screw	5813	Guard Screw (A)	7590	Line Roller Screw Cap
0757	Drive Gear Washer	5814	Bail Trip Lever Screw	7591	Bail Arm
1506	Roller Clutch Cover Screw	5816	Bail Trip Lever	7592	Bail Spring Cover
1676	Side Cover Screw (long)	5820	Spacer	7593	Bail Assembly
2298	Spacer	5823	Lever Spring Guide (A)	7594	Bail Hold Support Spacer
2409	Worm Shaft Spacer	5825	Lever Spring Guide (B)	7597	Anti-Reverse Lever Screw
3204	Ball Bearing	5828	Worm Bushing (front)	7598	Anti-Reverse Lever
3306	Line Roller Bearing	5832	Worm Bushing (rear)	7599	Friction Ring
3600	Nut Lock Screw	5834	Anti-Reverse Cam Spring	7600	Drive Gear
4004	Drive Gear Bushing	5838	Oscillating Pawl	7601	Oscillating Slider
4743	Line Roller Bushing	5839	Oscillating Slider Bushing	7602	Oscillating Slider Retainer
4744	Roller Bearing Seal	5855	Oscillating Guide Holder	7604	Worm Shaft Retainer
5040	Roller Clutch Screw	5884	Rotor Nut	7605	Oscillating Guide
5042	Anti-Reverse Cam Ring	5922	Oscillating Pawl Retainer Screw	7606	Body I.D.Plate (B)
5447	Roller Clutch Assembly	5941	Side Cover Screw (short)	7608	Handle Assembly
5705	Roller Clutch Ring	5997	Line Roller	7609	Spool Assembly
5717	Ball Bearing	6127	Bail Hold Support Screw	7610	Main Shaft
5799	Rotor Nut Retainer	6172	Bail Hold Support Shaft	7611	Rotor
5801	Line Roller Washer	6286	Bail Trip Lever Spring	7612	Worm Shaft
5803	Bail Spring Guide (A)	6724	Idle Gear (B)	7613	Side Cover
5804	Spring Guide (A) Support	7428	Bail Trip Lever Washer	7614	Body
5805	Bail Spring	7432	Anti-Reverse Cam	7616	Spool Washer
5806	Bail Spring Guide (B)	7458	Line Roller Support Collar	7617	Slider Retainer Screw
5808	Bail Arm Washer	7568	Handle Screw Cap	7713	Pinion Gear

(140509)