STRADIC

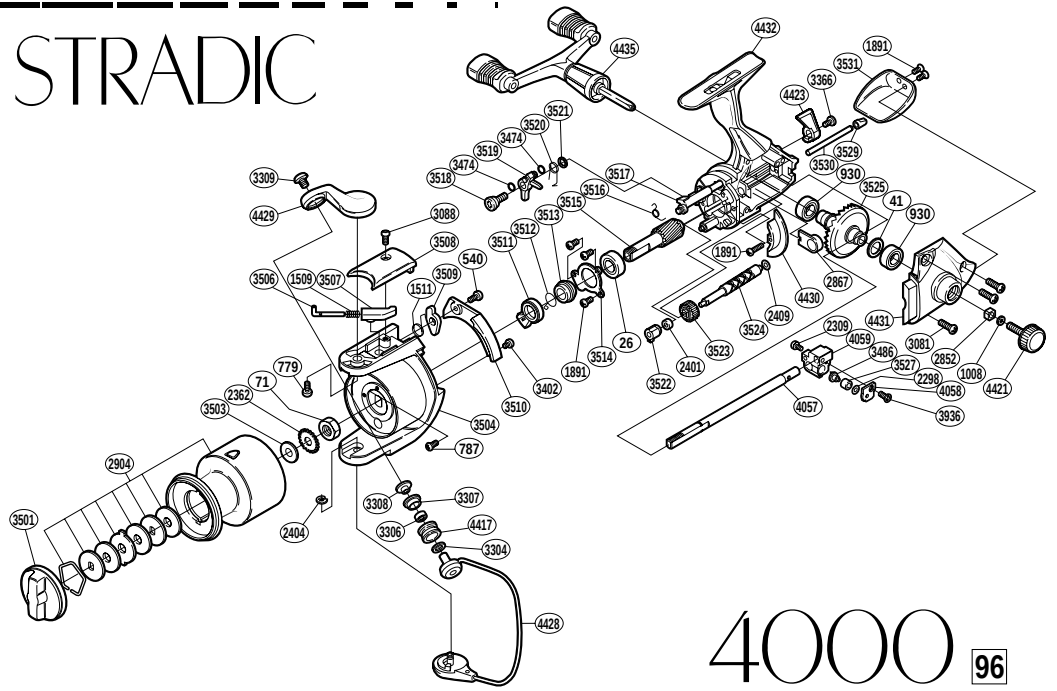

4000

96

RD No.	PARTS NAMES	RD No.	PARTS NAMES	RD No.	PARTS NAMES
0026	Ball Bearing	3307	Line Roller Bushing	3520	Anti-Reverse Pawl Spring
0041	Drive Gear Washer	3308	Line Roller Washer	3521	Anti-Reverse Pawl Spacer
0071	Rotor Nut	3309	Line Roller Screw	3522	Worm Bearing
0540	Bail Trip Lever Screw	3366	Anti-Reverse Lever Screw	3523	Idle Gear
0779	Bail Arm Screw	3402	Cover Screw	3524	Worm Shaft
0787	Nut Lock Screw	3474	“O”Ring	3525	Drive Gear
0930	Ball Bearing	3486	Oscillating Pawl	3527	Oscillating Slider Bushing
1008	Handle Lock Washer	3501	Drag Knob	3529	Oscillating Guide Holder
1509	Bail Spring	3503	Spool Washer	3530	Oscillating Guide
1511	Lever Spring	3504	Rotor	3531	Rear Protector
1891	Multi Purpose Screw	3506	Bail Spring Guide (A)	3936	Oscillating Pawl Cover Screw
2298	Spacer	3507	Bail Spring Guide (B)	4057	Main Shaft
2309	Slider Retainer Screw	3508	Bail Spring Cover	4058	Oscillating Pawl Cover
2362	Spool Support	3509	Bail Trip Lever	4059	Oscillating Slider
2401	Ball Bearing	3510	Counterbalance Cover	4417	Line Roller
2404	“E”Lock	3511	Anti-Reverse Lock Out	4421	Handle Screw Cap
2409	Worm Shaft Spacer	3512	Anti-Reverse Lock Out Spring	4423	Anti-Reverse Lever
2852	Handle Screw Lock	3513	Lock Out Spring Holder	4428	Bail Assembly
2867	Bushing	3514	Bearing Retainer	4429	Bail Arm
2904	Spool Assembly	3515	Pinion Gear	4430	Side Cover Flange
3081	Side Cover Screw	3516	Anti-Reverse Cam Spring	4431	Side Cover
3088	Bail Spring Cover Screw	3517	Anti-Reverse Cam	4432	Body
3304	Bearing Spacer	3518	Anti-Reverse Pawl Screw	4435	Double Paddle Handle Assembly
3306	Line Roller Bearing	3519	Anti-Reverse Pawl		

(070810)