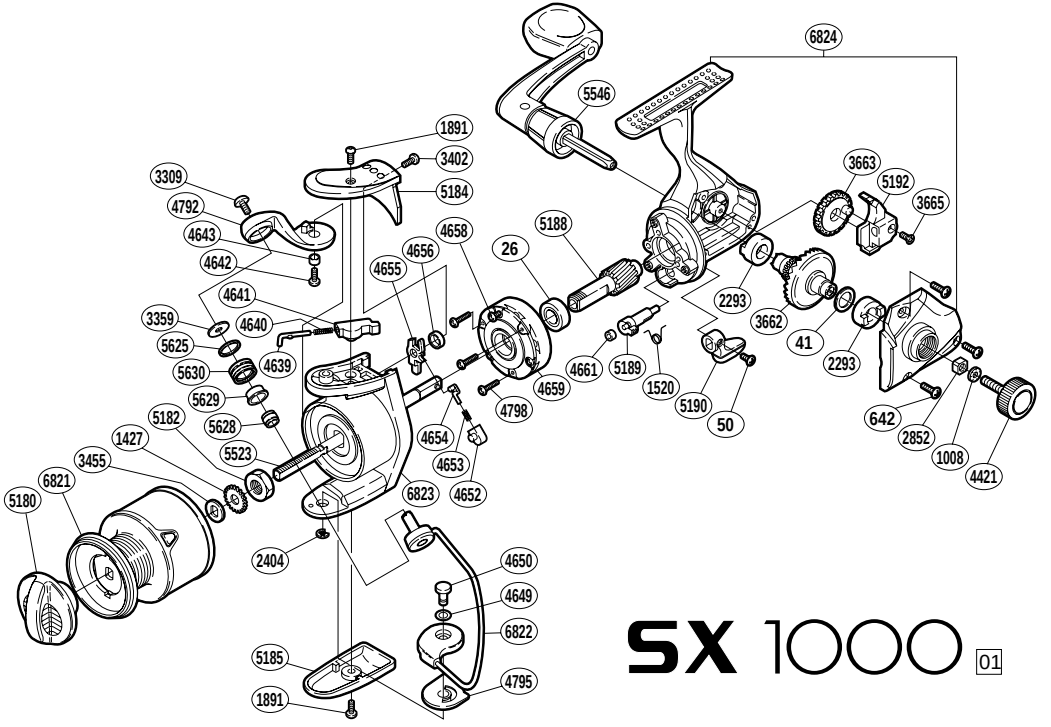

SX 1000 01

RD No.	PARTS NAMES	RD No.	PARTS NAMES	RD No.	PARTS NAMES
0026	Ball Bearing	4639	Bail Spring Guide (A)	5182	Rotor Nut
0041	Drive Gear Washer	4640	Bail Spring	5184	Bail Spring Cover
0050	Anti-Reverse Lever Screw	4641	Bail Spring Guide (B)	5185	Bail Hold Support Guard
0642	Side Cover Screw	4642	Bail Arm Screw	5188	Pinion Gear
1008	Handle Lock Washer	4643	Bail Arm Bushing	5189	Anti-Reverse Cam
1427	Spool Support	4649	Spacer	5190	Anti-Reverse Lever
1520	Anti-Reverse Cam Spring	4650	Bail Hold Support Shaft	5192	Oscillating Slider
1891	Multi-Purpose Screw	4652	Lever Spring Guide (B)	5523	Main Shaft
2293	Drive Gear Bushing	4653	Lever Spring	5546	Handle Assembly
2404	“E” Lock	4654	Lever Spring Guide (A)	5625	Line Roller Spacer
2852	Handle Screw Lock	4655	Bail Trip Lever	5628	Line Roller Collar
3309	Line Roller Screw	4656	Trip Lever Spacer	5629	Line Roller Bushing
3359	Line Roller Washer	4658	Clutch Cover Screw	5630	Line Roller
3402	Bail Spring Cover Screw (small)	4659	Roller Clutch Assembly	6821	Spool Assembly
3455	Spool Washer	4661	Anti-Reverse Cam Ring	6822	Bail Assembly
3662	Drive Gear	4792	Bail Arm	6823	Rotor
3663	Oscillating Gear	4795	Bail Hold Support Spacer	6824	Body Assembly
3665	Slider Retainer Screw	4798	Roller Clutch Screw		
4421	Handle Screw Cap	5180	Drag Knob		

(120204)