TITANOS XT 10000

01

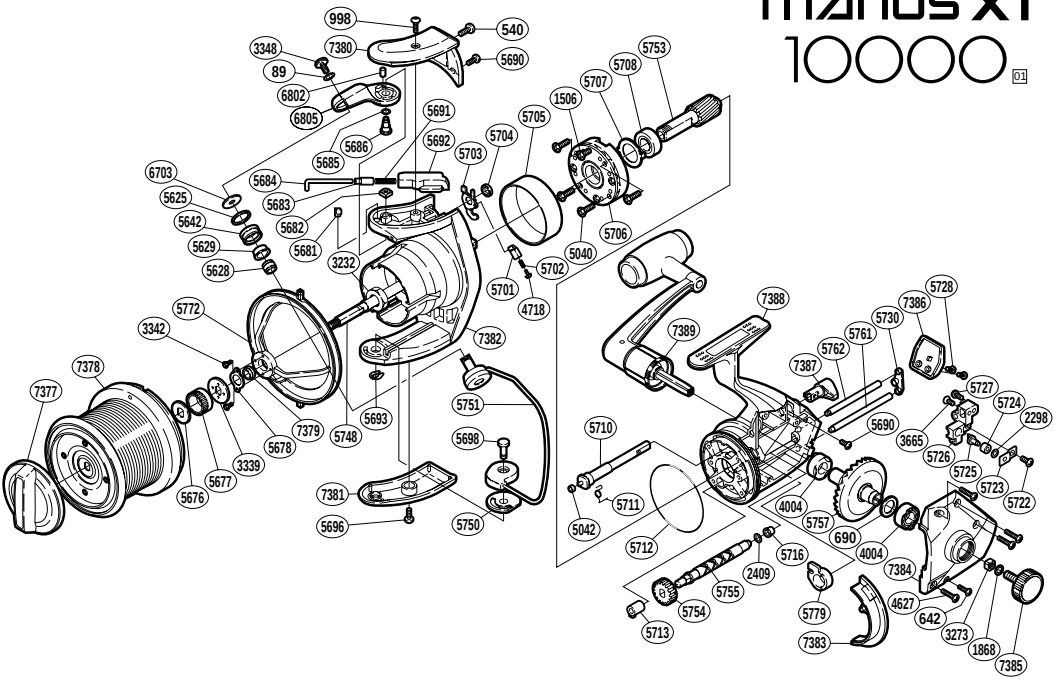

RD No.	PARTS NAMES	RD No.	PARTS NAMES	RD No.	PARTS NAMES
0089	Lock Washer	5684	Bail Spring Guide (A)	5748	Main Shaft
0540	Bail Spring Cover Screw (medium)	5685	Spacer	5750	Bail Hold Support Spacer
0642	Side Cover Screw (small)	5686	Bail Arm Shaft	5751	Bail Assembly
0690	Drive Gear Washer	5690	Multi-Purpose Screw	5753	Pinion Gear
0998	Bail Spring Cover Screw (long)	5691	Bail Spring	5754	Idle Gear
1506	Clutch Cover Screw	5692	Bail Spring Guide (B)	5755	Worm Shaft
1868	Handle Lock Washer	5693	“U” Lock	5757	Drive Gear
2298	Spacer	5696	Guard Screw	5761	Oscillating Guide (long)
2409	Worm Shaft Spacer	5698	Bail Hold Support Shaft	5762	Oscillating Guide (short)
3232	Rotor Nut	5701	Lever Spring Guide (B)	5772	Line Safety Guard
3273	Handle Screw Lock	5702	Lever Spring	5779	Bushing
3339	Spool Support (B)	5703	Bail Trip Lever	6703	Line Roller Washer
3342	Bearing Retainer Screw	5704	Trip Lever Spacer	6802	Bail Arm Bushing
3348	Line Roller Screw	5705	Roller Clutch Ring	6805	Bail Arm
3665	Slider Retainer Screw (A)	5706	Roller Clutch Assembly	7377	Drag Knob
4004	Drive Gear Bushing	5707	Bearing Washer	7378	Spool Assembly
4627	Side Cover Screw (large)	5708	Ball Bearing	7379	Bushing
4718	Lever Spring Guide (A)	5710	Anti-Reverse Cam	7380	Bail Spring Cover
5040	Roller Clutch Screw	5711	Anti-Reverse Cam Spring	7381	Bail Hold Support Guard
5042	Anti-Reverse Cam Ring	5712	“O” Ring (large)	7382	Rotor
5625	Line Roller Spacer	5713	Worm Bushing (front)	7383	Side Cover Flange
5628	Line Roller Collar	5716	Worm Bushing (rear)	7384	Side Cover
5629	Line Roller Bushing	5722	Oscillating Pawl Cover Screw	7385	Handle Screw Cap
5642	Line Roller	5723	Oscillating Pawl Cover	7386	Rear Protector
5676	Spool Washer	5724	Oscillating Slider Bushing	7387	Anti-Reverse Lever
5677	Spool Support (A)	5725	Oscillating Pawl	7388	Body
5678	Bearing Retainer	5726	Oscillating Slider	7389	Handle Assembly
5681	Angle Controller	5727	Slider Retainer Screw (B)		
5682	Bail Arm Nut	5728	Rear Protector Screw		
5683	Spring Guide (A) Support	5730	Worm Shaft Retainer Washer		

(130315)