TN 14 01

TRINIDAD

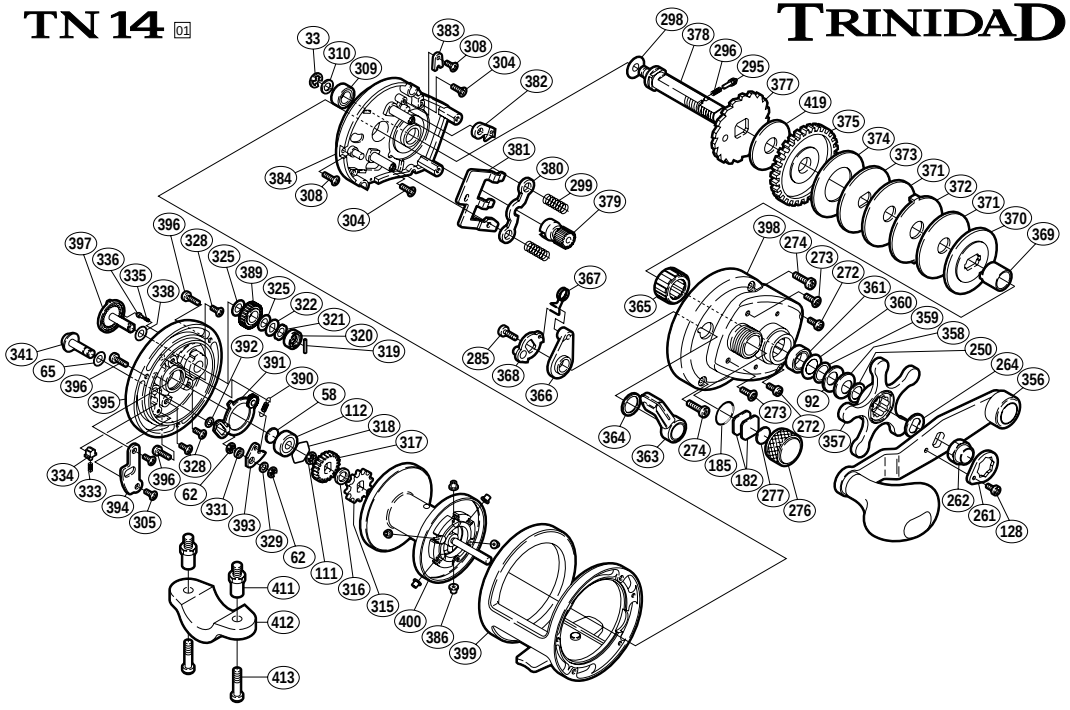

TGT No.	PARTS NAMES	TGT No.	PARTS NAMES	TGT No.	PARTS NAMES
0033	Drive Shaft Retainer	0317	“BR” Gear (A)	0372	Eared Washer (E)
0058	Spacer“B”	0318	Bearing Retainer	0373	Key Washer (C)
0062	Click Pawl Retainer	0319	“BR” Cam Pin	0374	Drag Washer (B)
0065	Spacer (A)	0320	“BR” Cam	0375	Drive Gear
0092	Drag Spring Washer (8H)	0321	“BR” Friction Washer	0377	Anti-Reverse Ratchet
0111	Click Gear Retainer	0322	“BR” Washer (C)	0378	Drive Shaft
0112	Ball Bearing	0325	“BR” Washer (B)	0379	Pinion Gear
0128	Handle Nut Plate Screw	0328	“BR” Set Plate Screw	0380	Yoke
0182	Cast Control Spacer (A)	0329	Spacer (B)	0381	Yoke Plate
0185	“O” Ring	0331	Click Pawl Spacer	0382	Anti-Reverse Pawl
0250	Star Drag Washer	0333	Click Spring	0383	Anti-Reverse Pawl Keeper
0261	Handle Nut Plate	0334	Click Spring Holder	0384	Set Plate
0262	Handle Nut	0335	“BR” Click Spring	0386	Brake Collar
0264	Drive Shaft Shield	0336	“BR” Click Pin	0389	“BR” Gear (C)
0272	Right Side Plate Screw (D)	0338	“BR” Washer (D)	0390	Click Pawl Spring
0273	Right Side Plate Screw (C)	0341	Click Button	0391	“BR” Set Plate
0274	Right Side Plate Screw (A)	0356	Handle Assembly	0392	Spacer (D)
0276	Cast Control Cap	0357	Star Drag	0393	Click Pawl
0277	Cast Control Spacer (B)	0358	Drag Spring Washer (8L)	0394	Click Spring Retainer
0285	Clutch Lever Screw	0359	Bearing Thrust Washer	0395	Left Side Plate
0295	Click Pin	0360	Bearing Seal	0396	Left Side Plate Screw
0296	Click Spring	0361	Ball Bearing	0397	“BR” Dial
0298	Drive Shaft Washer (B)	0363	Clutch Lever	0398	Right Side Plate
0299	Yoke Spring	0364	Smoother	0399	One-Piece Frame
0304	Set Plate Screw (B)	0365	Roller Clutch Bearing	0400	Spool Assembly
0305	Click Spring Retainer Screw	0366	Eccentric Cam Bushing	0419	Drag Washer (A)
0308	Multi-Purpose Screw	0367	Clutch Spring		
0309	Ball Bearing	0368	Clutch Cam		
0310	Drive Shaft Washer (A)	0369	Roller Clutch Inner Tube	0411	Rod Clamp Nut (accessory)
0315	Click Gear	0370	Key Washer	0412	Rod Clamp (accessory)
0316	Spool Shaft Spacer	0371	Drag Washer (D)	0413	Rod Clamp Bolt (accessory)

(120712)