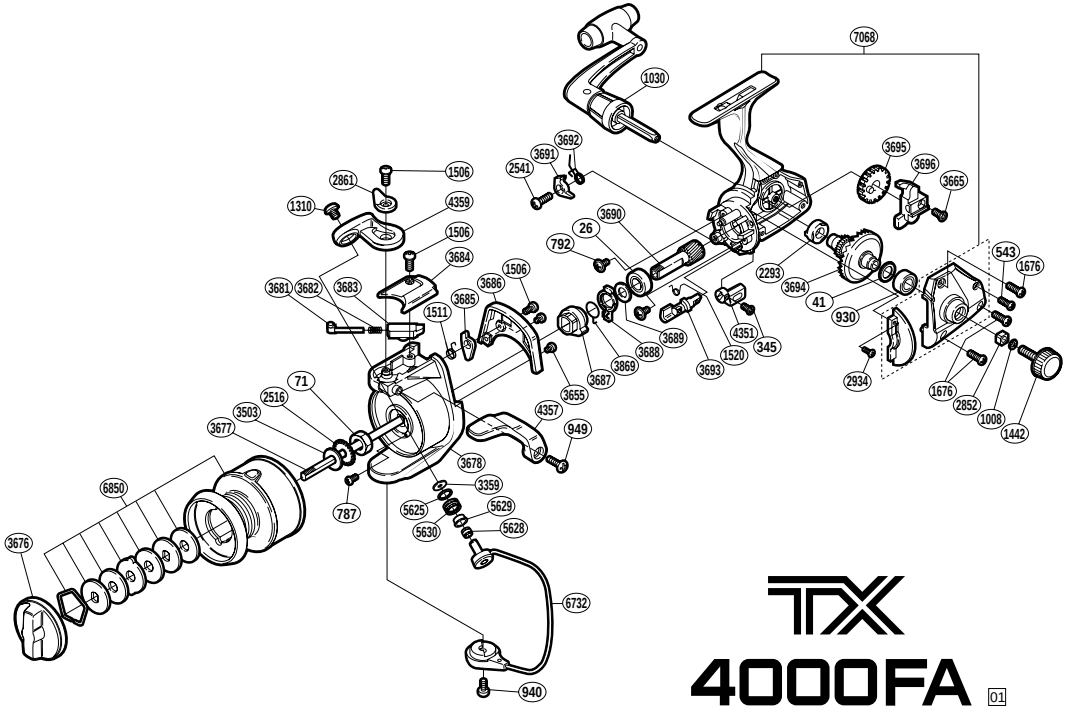

TX 4000FA

01

RD No.	PARTS NAMES	RD No.	PARTS NAMES	RD No.	PARTS NAMES
0026	Ball Bearing	2541	Anti-Reverse Pawl Screw	3690	Pinion Gear
0041	Drive Gear Washer	2852	Handle Screw Lock	3691	Anti-Reverse Pawl
0071	Rotor Nut	2861	Trigger Cam	3692	Anti-Reverse Pawl Spring
0345	Anti-Reverse Lever Screw	2934	Flange Screw	3693	Anti-Reverse Cam
0543	Side Cover Screw (small)	3359	Line Roller Washer	3694	Drive Gear
0787	Nut Lock Screw	3503	Spool Washer	3695	Oscillating Gear
0792	Bearing Retainer Screw	3655	Cover Screw	3696	Oscillating Slider
0930	Ball Bearing	3665	Slider Retainer Screw	3869	Anti-Reverse Lock Out Spring
0940	Bail Hold Support Screw	3676	Drag Knob	4351	Anti-Reverse Lever
0949	Trigger Screw	3677	Main Shaft	4357	Quick-Fire II Trigger
1008	Handle Lock Washer	3678	Rotor	4359	Bail Arm
1030	Handle Assembly	3681	Bail Spring Guide (A)	5625	Line Roller Spacer
1310	Line Roller Screw	3682	Bail Spring	5628	Line Roller Collar
1442	Handle Screw Cap	3683	Bail Spring Guide (B)	5629	Line Roller Bushing
1506	Multi-Purpose Screw	3684	Bail Spring Cover	5630	Line Roller
1511	Lever Spring	3685	Bail Trip Lever	6732	Bail Assembly
1520	Anti-Reverse Cam Spring	3686	Counterbalance Cover	6850	Spool Assembly
1676	Side Cover Screw (large)	3687	Anti-Reverse Ratchet	7068	Body Assembly
2293	Drive Gear Bushing	3688	Anti-Reverse Lock Out		
2516	Spool Support	3689	Bushing Washer		

(120822)