ZX

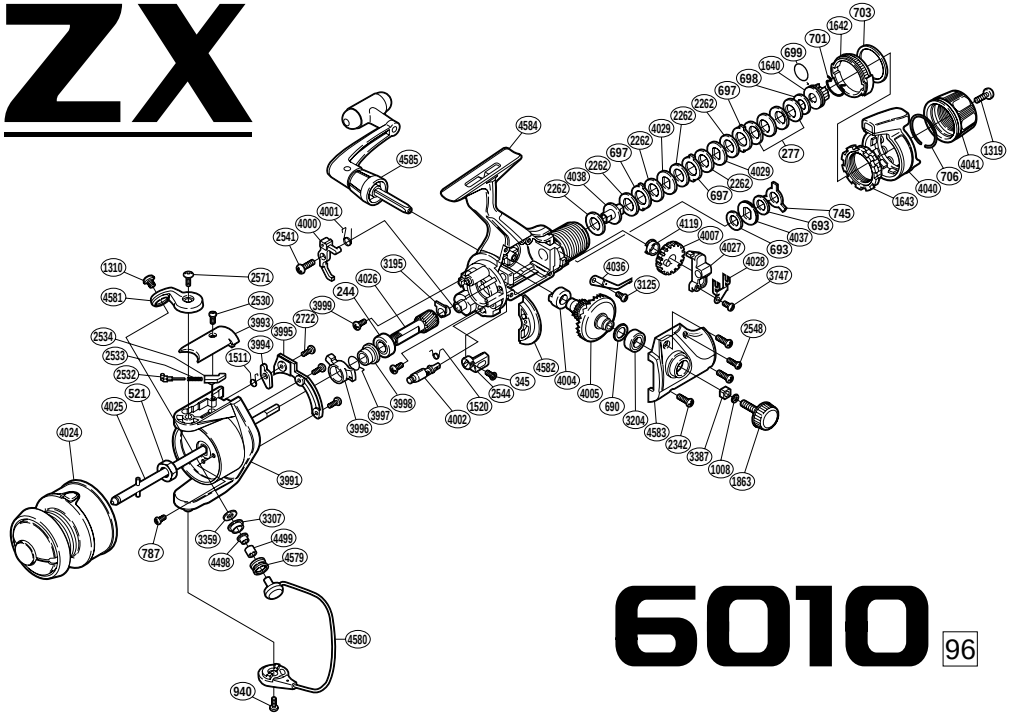

6010

96

RD No.	PARTS NAMES	RD No.	PARTS NAMES	RD No.	PARTS NAMES
0244	Ball Bearing	2530	Bail Spring Cover Screw	4002	Anti-Reverse Cam
0277	Coned Disc Spring	2532	Bail Spring Guide (A)	4004	Drive Gear Bushing
0345	Anti-Reverse Lever Screw	2533	Bail Spring	4005	Drive Gear
0521	Rotor Nut	2534	Bail Spring Guide (B)	4007	Oscillating Gear
0690	Drive Gear Washer	2541	Anti-Reverse Pawl Screw	4024	Spool Assembly (S-6)
0693	Drag Washer “C2” (cloth)	2544	Anti-Reverse Lever	4025	Main Shaft
0697	Eared Washer “B”	2548	Side Cover Screw (small)	4026	Pinion Gear
0698	Drag Spring Washer	2571	Bail Arm Screw	4027	Oscillating Slider
0699	“O” Ring	2722	Counterbalance Cover Screw	4028	Oscillating Slider Retainer
0701	Hold Click Spring	3125	Drag Click Screw	4029	Key Washer “A”
0703	Fightin’ Pressure Screw Washer	3195	Bushing	4036	Drag Click
0706	Lever Hold Spring	3204	Ball Bearing	4037	Click Gear
0745	Eared Washer “BF”	3307	Line Roller Bushing	4038	Drag Shaft
0787	Nut Lock Screw	3359	Line Roller Washer	4040	Fightin’ Drag Lever
0940	Bail Hold Support Screw	3387	Handle Screw Lock	4041	Drag Programmer
1008	Handle Lock Washer	3747	Slider Retainer Screw	4119	Oscillating Gear Bushing
1310	Line Roller Screw	3991	Rotor	4498	Line Roller Collar (A)
1319	Drag Programmer Screw	3993	Bail Spring Cover	4499	Line Roller Collar (B)
1511	Lever Spring	3994	Bail Trip Lever	4579	Line Roller
1520	Anti-Reverse Cam Spring	3995	Counterbalance Cover	4580	Bail Assembly
1640	Pressure Screw	3996	Anti-Reverse Lock Out	4581	Bail Arm
1642	Lever Click Gear	3997	Anti-Reverse Lock Out Spring	4582	Side Cover Flange
1643	Fightin’ Pressure Screw	3998	Lock Out Spring Holder	4583	Side Cover
1863	Handle Screw Cap	3999	Bearing Retainer Screw	4584	Body
2262	Drag Washer “C1” (blue)	4000	Anti-Reverse Pawl	4585	Handle Assembly
2342	Side Cover Screw (large)	4001	Anti-Reverse Pawl Spring		

(071012)